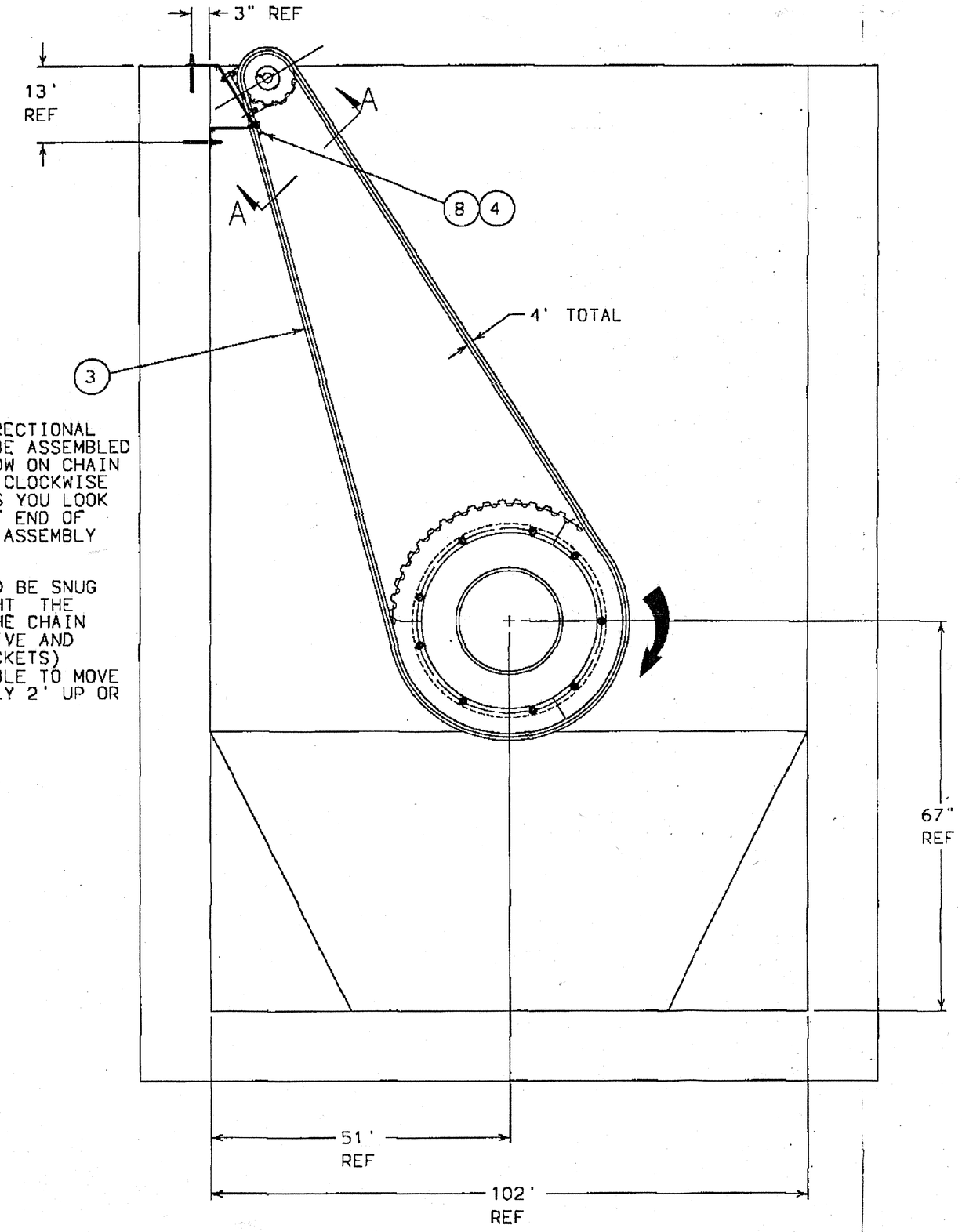

CHAIN IS DIRECTIONAL AND SHOULD BE ASSEMBLED SO THAT ARROW ON CHAIN POINTS IN A CLOCKWISE DIRECTION AS YOU LOOK AT THE SHAFT END OF THE GEARBOX ASSEMBLY (ITEM # 1)

CHAIN SHOULD BE SNUG BUT NOT TIGHT THE CENTER OF THE CHAIN (BETWEEN DRIVE AND DRIVEN SPROCKETS) SHOULD BE ABLE TO MOVE APPROXIMATELY 2' UP OR DOWN

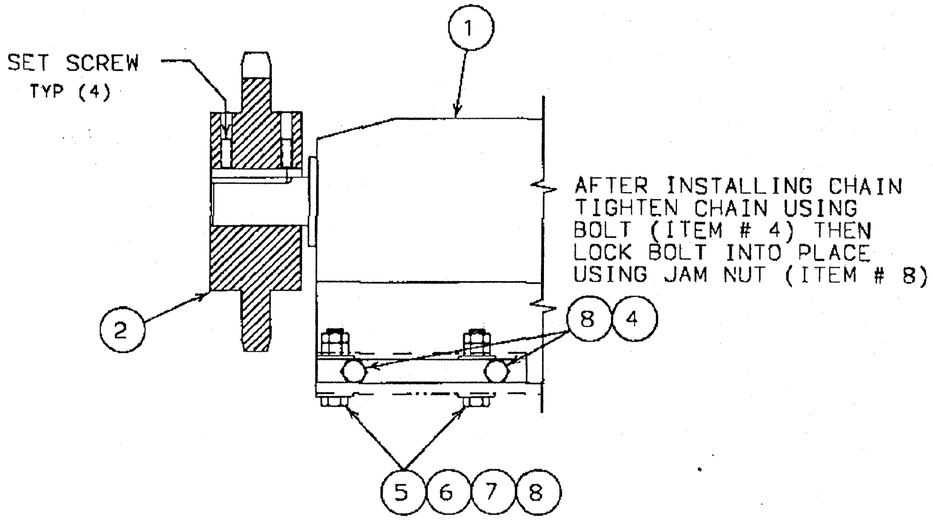

VIEW A-A

NOTE
CLEAN SHAFT WITH SPRAY SOLVENT APPLY DRY FILM LUBRICANT PER INSTRUCTIONS ON CONTAINER
DO NOT INSTALL SPROCKET UNTIL DRY FILM (TEFLON SPRAY) LUBRICANT HAS CURED

ITEM	QUAN	PART NUMBER	DESCRIPTION		DWG
8	6	2600234	NUT HEX JAM 1/2 -16NC	316	-
7	4	2600517	NUT HEX FULL 1/2'-13NC	316	-
6	8	2600426	WASHER FLAT 1/2'	316	-
5	4	2602894	HHCS 1/2'-13NC x 2 1/4" LG	316	-
4	2	2606513	HHMS 1/2'-13NC x 3 LG FULL THRD	316	-
3	26FT	2606032	CHAIN #EPC78 (120 LINKS)	NYLON-6/6	-
2	1	2607227	SPROCKET-DRIVE 11T	UHMW	-
1	1	2607539	GEARBOX & MOTOR NORD SK33-71L/4		-

JOB NAME	
DO NOT SCALE DRAWING	
DRN BY MMR	DATE 4 17-97
CKD BY	ACT WT
SCALE 1 16	
PATH S \DATA\ENG\STD\	

AQUA-AEROBIC SYSTEMS INC
MANUFACTURERS OF WASTEWATER TREATMENT EQUIPMENT

NAME
DRIVE SYSTEM

2 AM - ATriest - Released -